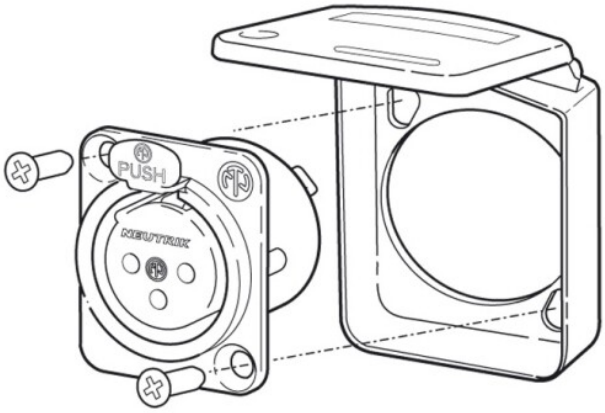

SCDX

This hinged cover seals D-size chassis connectors from water, dust and dirt in unmated condition according to IP42. It is available in different colors.

SCDX – black (if used with opticalCON, black indicates multi-mode)
SCDX-5 – green (if used with opticalCON, green indicates single-mode APC)
SCDX-6 – blue (if used with opticalCON, blue indicates single-mode PC)
SCDX-9 – white (e.g. walloutlet)

Suitable for:
XLR D Series female
XLR D Series male
1/4" Jacks D Series
speakON NL2M* and NL4M*
powerCON 20 A Series NAC3MPA* and NAC3MPB*
powerCON TRUE1 NAC3MPX
USB NAUSB-W*
HDMI NAHDMI-W*
D-SUB NADB*
Firewire NA1394-6-W*
etherCON A&B Series
etherCON D Series
etherCON CAT6 Chassis Connectors
BNC D Series
Phono (RCA) Chassis Connectors

All rights reserved / 25.04.2024

NEUTRIK

Technical Information

Product	
Title	SCDX

Mechanical	
Wiresize	

Material	
Sealing cover	PP-R

Environmental	
Flammability	UL 94 HB
Temperature range	-30° to +80 °C

All rights reserved / 25.04.2024