ASSEMBLY INSTRUCTION

Rear Twist BNC - "Large" | 75Ω Cable Connector - Crimp version

Ⓐ
Ⓑ

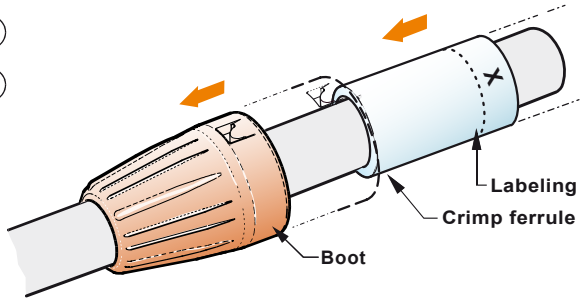

Ⓒ **NBLC75BVZ17:**

NBLC75BSX14:

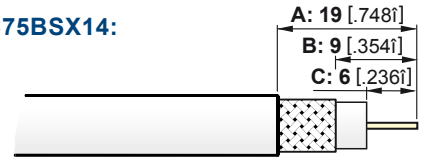

Ⓓ

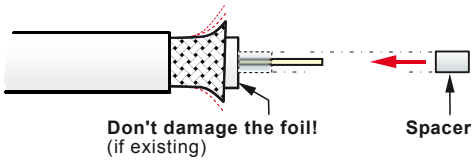

Ⓔ

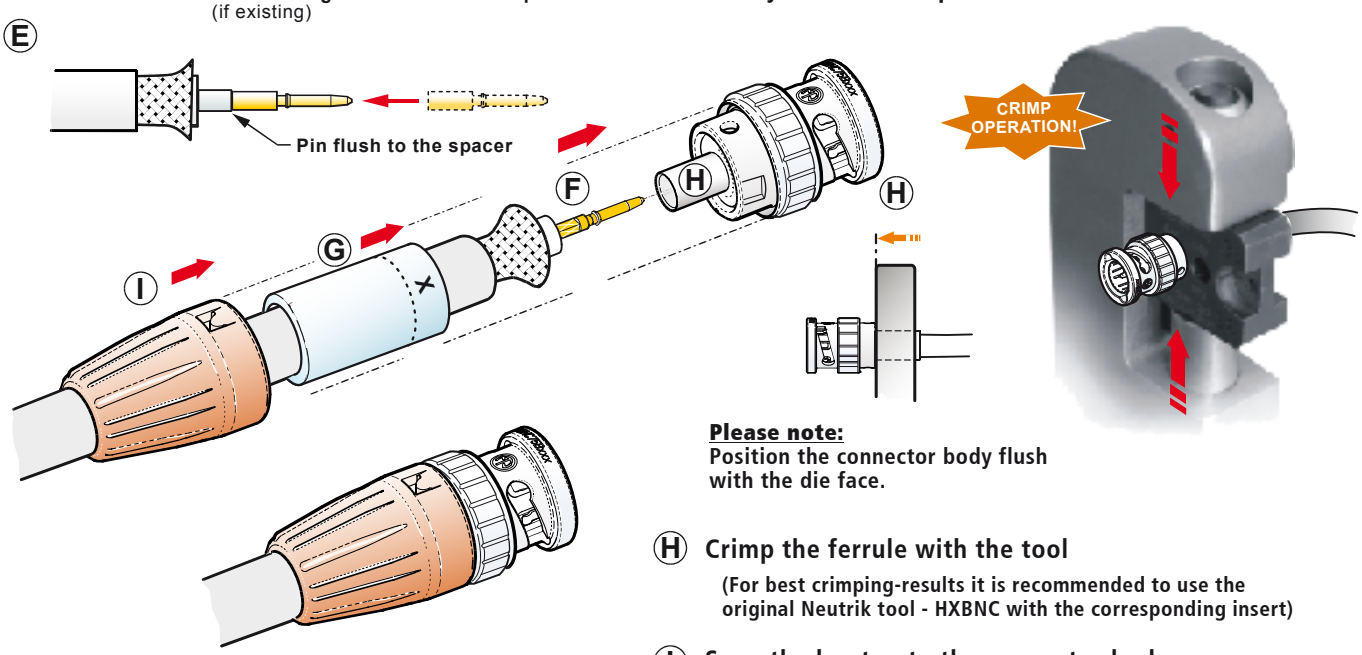

Ⓐ Slide the boot onto the cable
- Position the labeling to the cabelend

Ⓑ Slide the crimp ferrule onto the cable

Ⓒ Prepare cable as shown
- Use an adjustable coaxial cable stripper

Ⓓ Spread the braided shield
- slide the spacer onto the center conductor

Ⓔ Crimp the pin
- position the pin on the center conductor
- crimp the pin with the tool

  (For best crimping-results it is recommended to use the original Neutrik crimp tool
  - HXBNC with the corresponding insert
  or hexcrimp acc. to IEC 803-W (SW 1.7)
  or squarecrimp acc. to IEC 803-2 (SW 1.6)
- Pin can also be soldered (Optional)!
- Straighten the pin if misaligned.

Ⓕ Insert the cable into the connector body

Ⓖ Slide the crimp ferrule over the shield to the front and push the cable and leading ferrule to it`s end position until you hear a snap noise.

Please note:
Position the connector body flush with the die face.

Ⓗ Crimp the ferrule with the tool

(For best crimping-results it is recommended to use the original Neutrik tool - HXBNC with the corresponding insert)

Ⓘ Snap the boot onto the connector body

NEUTRIK AG	LI	T: +423 / 237 24 24	F: +423 / 232 53 93	NEUTRIK Vertriebs GmbH	DE/NL/AT	T: +49 8131 / 280 890	F: +49 8131 / 280 830
NEUTRIK Zürich AG	CH	T: +41 44 / 736 5010	F: +41 44 / 736 5011	NEUTRIK France	FR	T: +33 1 / 4131 6750	F: +33 1 / 4131 0511
NEUTRIK USA Inc.	USA	T: +1 732 / 901 9488	F: +1 732 / 901 9608	NEUTRIK Tokyo Ltd.	JP	T: +81 3 / 3663 4733	F: +81 3 / 3663 4796
NEUTRIK (UK) Ltd.	UK	T: +44 1983 / 811 441	F: +44 1983 / 811 439	NEUTRIK Hong Kong Ltd.	HK	T: +852 / 2687 6055	F: +852 / 2687 6052

Draft. Nr.: BDA 144/ 3102M1351 | Update: 02.04.2009 |

Data subject to change without prior notice. ©2009NEUTRIK®. ALL RIGHTS RESERVED.

www.neutrik.com

NEUTRIK